ARAS
Handling Equipment

PRODUCT CATALOGUE

Lithium Pallet Truck

ASLPT15H · ASLPT20H · ASLPT15H-65L · ASPPT20H

Smart · Powerful · Durable — built to work 24 hours with a spare battery.



1.5 / 2 Ton	115 mm	48 V Li-ion	6 s	4.5 km/h
LOAD CAPACITY	LIFT HEIGHT	BATTERY	BATTERY SWAP	TRAVEL SPEED

OVERVIEW

Hand-truck size, electric performance

A compact lithium-powered pallet truck with almost the same footprint as a hand pallet truck — but with powered travel, a maintenance-free brushless drive motor and a swappable 48 V lithium battery. Choose full-electric models with powered lifting, a 65 mm low-profile version, or a semi-electric 2-ton model with manual hydraulic lifting.



Compact workshops · Warehouses · Trucks & vans · Tail lifts · Elevators · Entrance ramps

The range

ASLPT15H
FULL ELECTRIC

Capacity	1,500 kg
Lift	115 mm
Fork height	82 mm
Drive motor	0.75 kW
Weight	116.5–123 kg

ASLPT20H
FULL ELECTRIC

Capacity	2,000 kg
Lift	115 mm
Fork height	82 mm
Drive motor	1.0 kW
Weight	119–125.5 kg

ASLPT15H-65L
FULL ELECTRIC · 65 MM FORKS

Capacity	1,500 kg
Lift	110 mm
Fork height	65 mm
Drive motor	0.75 kW
Weight	116.5–123 kg

ASPPT20H
SEMI-ELECTRIC

Capacity	2,000 kg
Lift	115 mm
Fork height	82 mm
Drive motor	1.0 kW
Weight	117–123.5 kg

At a glance

≈ Same — size as a hand pallet truck

3× — efficiency of a manual pallet truck

3× — service life of a manual pallet truck

6 s — to swap the battery

2 h — quick charge to full

24 h — working with a spare battery

Key features



Brushless drive motor

750 W / 1000 W brushless motor for powered travelling and powered lifting & lowering. No carbon brushes to replace — brushed motors need new brushes every 12–18 months — saving maintenance time and cost.

6% Laden 1.5 / 2 t · **10%** With 800 kg · **20%** Unladen

High gradeability

Moves 1.5 or 2 tons easily over the slopes at warehouse entrances. Travel speed 4.0 km/h laden and 4.5 km/h unladen, with regenerative braking and an electromagnetic brake.



Non-stop working

The maintenance-free lithium battery is replaced in only 6 seconds. With a spare battery the truck can keep working 24 hours; quick charging takes 2 hours to full — charge and use freely.



Safe lithium battery

Soft-package cells with a built-in protection board and multiple protections against overcharge and over-discharge. Complies with IEC and UL certification requirements. Long service life and no water to add.



Most compact in its class

Suits compact workshops, trucks or vans, tail lifts and elevators. The 1.5-ton model has the smallest turning radius among similar products.



Solid build, no breaking

Chassis of solid materials with no bending or deformation. Reinforced rocker arm, push rod, wheel frame and support seat — no plastic parts, less damage.

Specifications are subject to change without notice. Images for illustration.

BUILD & CONFIGURATION

Dimensions, structure and standard equipment

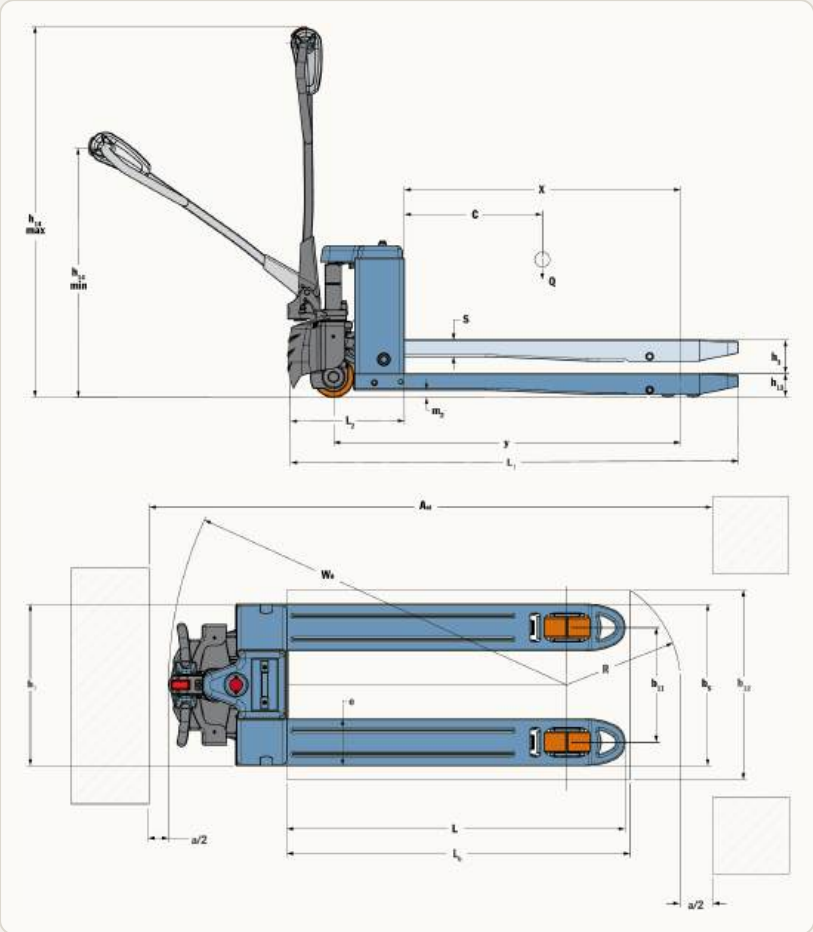

Key dimension		mm
Fork height, lowered	h13	82 ± 2 (65 ± 2)
Lift	h3	115 (110)
Tiller height, min / max	h14	740 / 1220
Overall length	L1	1552 / 1622 (1566 / 1636)
Fork length	L	1150 / 1220
Overall width	b1	550 / 685
Fork section, height × width	s/e	58 × 160 (45 × 160)
Wheelbase	y	1197 / 1267
Turning radius	Wa	1353 / 1426
Aisle, 1000×1200 crossways	Ast	2155 / 2226
Aisle, 800×1200 lengthways	Ast	2024 / 2064
Load centre	c	600

Values in brackets: ASLPT15H-65L (low profile). Full data on page 4.

6 mm
Top cap thickness

5 mm
V-block thickness

4 mm
Fork steel thickness

65 mm
Low-profile fork height

Standard configuration



Multi-function handle
Full electric



Ergonomic handle
Semi-electric



Lithium battery
48 V, swappable



Intelligent charger
2 h quick charge



Protection cover
Guards drive motor, anti-foot crush



PU load wheels
Tandem or single

Handle controls

- Horn
- Emergency reverse button
- Forward / reverse butterfly switch
- Lifting / lowering buttons
- LCD screen: battery indicator with hour meter, error code display and recharge alert

Integral forks, no splicing

One-piece solid forks with no deformation, designed to handle European, American and plastic pallets.

Choices

Lifting / lowering	Electric (ASLPT models) · Manual hydraulic (ASPPT20H)
Fork height	82 mm standard · 65 mm low profile (ASLPT15H-65L)
Fork length	1150 mm · 1220 mm
Overall width	550 mm · 685 mm
Load wheels	Single PU · Tandem PU
Battery	48 V / 10 Ah · 48 V / 15 Ah

TECHNICAL DATA

Specifications

Model	Sym.	Unit	ASLPT15H	ASLPT20H	ASLPT15H-65L	ASPPT20H
CHARACTERISTICS						
Drive			Electric			
Operator type			Pedestrian			
Load capacity / rated load	Q	kg	1500	2000	1500	2000
Load centre	c	mm	600			
WHEELS						
Wheel type			PU			
Wheel size, front		mm	140 × 55			
Wheel size, rear — single wheel		mm	80 × 93	80 × 93	60 × 93	80 × 93
Wheel size, rear — tandem		mm	80 × 70	80 × 70	60 × 70	80 × 70
Wheels, number front / rear (x = drive)			1x + 2 / 4			
DIMENSIONS						
Height, forks lowered	h13	mm	82 ± 2	82 ± 2	65 ± 2	82 ± 2
Lift	h3	mm	115	115	110	115
Height of tiller in drive position, min / max	h14	mm	740 / 1220			
Wheelbase	y	mm	1197 / 1267			
Overall length	L1	mm	1552 / 1622	1552 / 1622	1566 / 1636	1552 / 1622
Fork length	L	mm	1150 / 1220			
Overall width	b1	mm	550 / 685			
Distance between fork arms	b5	mm	550 / 685			
Fork dimensions, thickness / width	s / e	mm	58 / 160	58 / 160	45 / 160	58 / 160
Ground clearance, centre of wheelbase	m2	mm	22 / 137 (24 / 139)	22 / 137 (24 / 139)	16.5 / 133.5 (17.2 / 132.2)	22 / 137 (24 / 139)
Aisle width, pallet 1000 × 1200 crossways	Ast	mm	2155 / 2226			
Aisle width, pallet 800 × 1200 lengthways	Ast	mm	2024 / 2064			
Turning radius	Wa	mm	1353 / 1426			
PERFORMANCE						
Travel speed, laden / unladen		km/h	4.0 / 4.5			
Lifting speed, laden / unladen		mm/s	18 / 23	18 / 23	18 / 23	Manual
Lowering speed, laden / unladen		mm/s	56 / 46	56 / 46	56 / 46	Manual
Max. gradeability, laden / unladen		%	6 / 20			
DRIVE SYSTEM & BATTERY						
Drive motor (brushless)		kW	DC 0.75	DC 1.0	DC 0.75	DC 1.0
Lift motor		kW	DC 0.8	DC 0.8	DC 0.8	Hydraulic
Battery voltage / nominal capacity		V / Ah	48 / 10 (48 / 15)			
Travelling brake			Regenerative			
Brake			Electromagnetic			
Sound level at operator's ear (EN 12053)		dB(A)	< 70			
Service weight incl. battery		kg	116.5 / 123	119 / 125.5	116.5 / 123	117 / 123.5

Request a quotation

Sales, service and spare parts across all 7 Emirates.

ADDRESS
Warehouse No. FZS1BK06,
Jebel Ali Free Zone, Dubai,
U.A.E.

PHONE
+971 4 887 6602
+971 54 996 4144 (WhatsApp)

EMAIL & WEB
sales@arasfze.com
www.arasfze.com